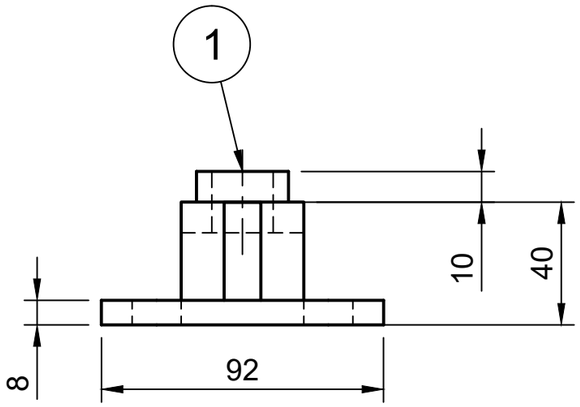

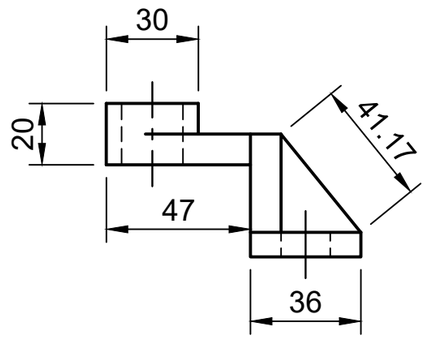

Parts List			
Item	Qty	Part Number	Material
1	1	2026-02-11-15-45-51-343	Steel

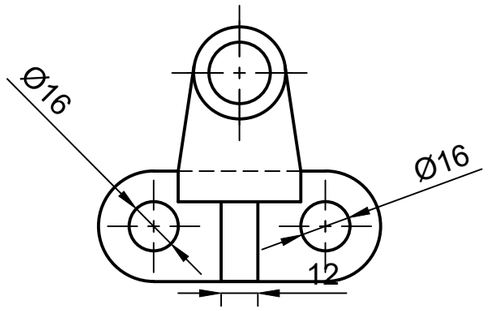

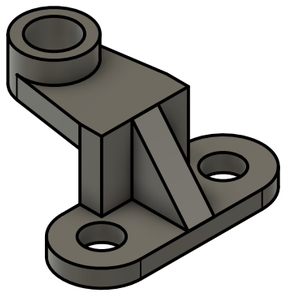

Dept. CSE	Technical reference 212225040228	Created by MANOSHREE N 25-02-2026	Approved by Dr.SARAVANAN M P
		Document type SKETCH	Document status
		Title edm 00	DWG No.
			Rev. / Date of issue 25/02/2026 / Sheet 1/1